| Size | | Main Dimension (mm) | | | | | | | | | | | |
|---|---|---|---|---|---|---|---|---|---|---|---|---|---|
| PN | DN | L | D | D0 | D1 | g | f | n×d | N-Md1 | H | H1 | H2 | H3 |
| 10 | 700 | 140 | 895 | 840 | 800 | 36 | 2 | 24×27 | 24-M24 | 2100 | 447.5 | 550 | 850 |
| 10 | 1000 | 260 | 1230 | 1160 | 1120 | 38 | 2 | 28-M24 | 28-M24 | 2500 | 600 | 800 | 1100 |

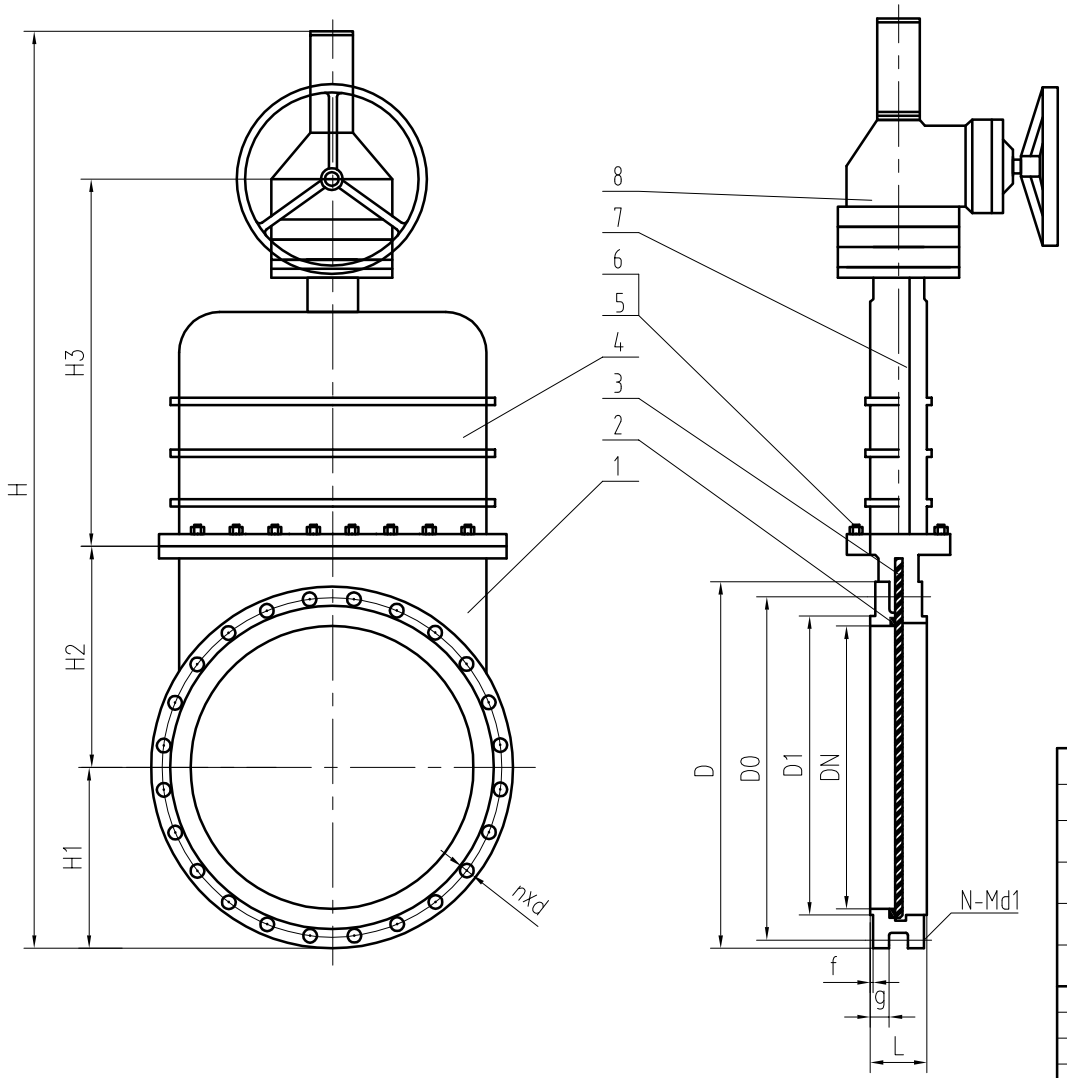


| Performance Specification | | | |
|---|---|---|---|
| Nominal Pressure | | 1.0 | MPa |
| Test Pressure | Intensity test | 1.5 | |
| | Back seal test | -- | |
| | Seal test | 1.1 | |
| | Gas test | 0.6 | |
| Working Temperature | | -10~80 | ℃ |
| Medium: coal gas ore pulp sewage | | | |

Techical Specification

1. Face to face dimension: GB/T15188.2-1994
2. End flange dimension: GB/T9119-2000
3. Inspection and test: GB/T13927-92

| NO. | Name | Material | NO. | Name | Material |
|---|---|---|---|---|---|
| 5 | Nut | A3 | | | |
| 4 | Bonnet | WCB | | | |
| 3 | Disc | 304 | 8 | Gear | |
| 2 | Seat | NBR | 7 | Stem | 2Cr13 |
| 1 | Body | WCB | 6 | Bolt | A3 |

| MARK | Q.TY | FILE NO. | SIGN | DATE |
|---|---|---|---|---|
| | | | | |

| DESIGN | | STANDARD | |
|---|---|---|---|
| CHECK | | APPROVE | |
| TECHNOLOGY | | | |

PN10

| DRAW MARK | WT. | SCALE |
|---|---|---|
| | | |

DRAW REV.01

ASSSEMBLE DRAWING

PZ573X-10C